800MHz TTL/CMOS Potato Chip

FEATURES:

. Patented technology
. Operating frequency up to 800MHz with 2pf load
. Operating frequency up to 600MHz with 5pf load
. Operating frequency up to 300MHz with 15pf load
. Operating frequency up to 150MHz with 50pf load
. Very low output pin to pin skew < 250ps
. Very low pulse skew < 100ps
. VCC = 1.65V to 3.6V
. Propagation delay < 1.7ns max with 15pf load
. Low input capacitance: 3pf typical
. Dual 1:4 fanout
. Available in 16pin 300mil wide SOIC package

DESCRIPTION:

Potato Semiconductor's PO49FCT3804G is designed for world top performance using submicron CMOS technology to achieve 800MHz TTL output frequency with less than 250ps output pulse skew.

PO49FCT3804G is a 3.3V CMOS Dual 1 input to 4 outputs Buffered driver to achieve 800MHz Max output frequency. Typical applications are clock and signal distribution.

Pin Configuration

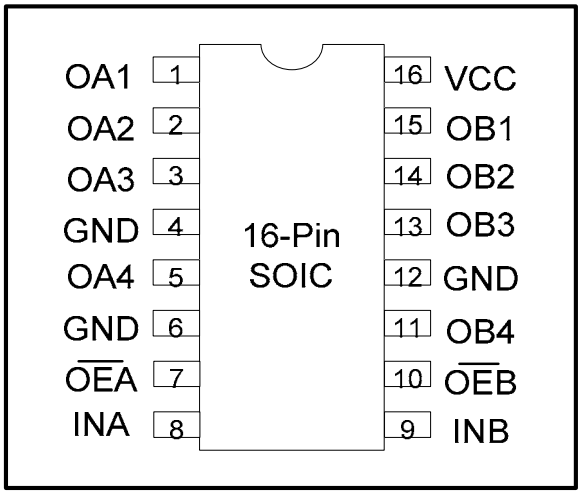

Logic Block Diagram

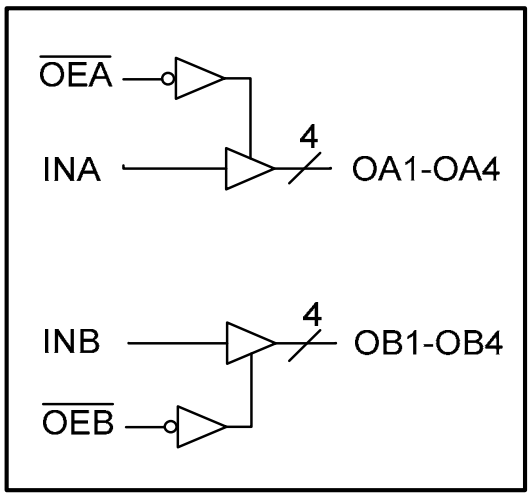

Pin Description

Pin Name	Description
INA, INB	Signal or clock Inputs
$\overline{OEA}$, $\overline{OEB}$	Hi-Z State Output Enable Inputs (Active LOW)
OAn, OBn	Signal or clock Outputs
GND	Ground
Vcc	Power

Inputs		Outputs
$\overline{OEA}$, $\overline{OEB}$	INA, INB	OAn, OBn
L	L	L
L	H	H
H	L	Z
H	H	Z

Copyright © 2005, Potato Semiconductor Corporation

Maximum Ratings

Description	Max	Unit
Storage Temperature	-65 to 150	°C
Operation Temperature	-40 to 85	°C
Operation Voltage	-0.5 to +4.6	V
Input Voltage	-0.5 to Vcc+0.5	V
Output Voltage	-0.5 to Vcc+0.5	V

Note:
stresses greater than listed under Maximum Ratings may cause permanent damage to the device. This is a stress rating only and functional operation of the device at these or any other conditions above those indicated in the operational sections of this specification is not implied. Exposure to absolute maximum rating conditions for extended periods may affect reliability specification is not implied.

DC Electrical Characteristics

Symbol	Description	Test Conditions	Min	Typ	Max	Unit
V_{OH}	Output High voltage	Vcc=3V Vin=VIH or VIL, IOH= -12mA	2.4	3	-	V
V_{OL}	Output Low voltage	Vcc=3V Vin=VIH or VIL, IOH=12mA	-	0.3	0.5	V
V_{IH}	Input High voltage	Guaranteed Logic HIGH Level (Input Pin)	2	-	Vcc	V
V_{IL}	Input Low voltage	Guaranteed Logic LOW Level (Input Pin)	-0.5	-	0.8	V
I_{OZH}	High Impedance Output current	Vcc = 3.6V and Vo = Vcc	-	-	1	uA
I_{OZL}	High Impedance Output current	Vcc = 3.6V and Vo = 0V	-	-	-1	uA
I_{IH}	Input High current	Vcc = 3.6V and Vin = 3.6V	-	-	1	uA
I_{IL}	Input Low current	Vcc = 3.6V and Vin = 0V	-	-	-1	uA
V_{IK}	Clamp diode voltage	Vcc = Min. And IIN = -18mA	-	-0.7	-1.2	V

Notes:
1. For conditions shown as Max. or Min., use appropriate value specified under Electrical Characteristics for the applicable device type.
2. Typical values are at Vcc = 3.3V, 25 °C ambient.
3. This parameter is guaranteed but not tested.
4. Not more than one output should be shorted at one time. Duration of the test should not exceed one second.
5. VoH = Vcc – 0.6V at rated current

Copyright © 2005, Potato Semiconductor Corporation

Power Supply Characteristics

Symbol	Description	Test Conditions (1)	Min	Typ	Max	Unit
I_{CCQ}	Quiescent Power Supply Current	Vcc=Max, Vin=Vcc or GND	-	0.1	30	uA

Notes:
1. For conditions shown as Max. or Min., use appropriate value specified under Electrical Characteristics for the applicable device type.
2. Typical values are at Vcc = 3.3V, 25EC ambient.
3. This parameter is guaranteed but not tested.
4. Not more than one output should be shorted at one time. Duration of the test should not exceed one second.

Capacitance (T_A= +25°C, f= 1MHz)

Parameters (1)	Description	Test Conditions	Typ	Max	Unit
Cin	Input Capacitance	Vin = 0V	3	4	pF
Cout	Output Capacitance	Vout = 0V	-	6	pF

Notes:
1 This parameter is determined by device characterization but not production tested.

Switching Characteristics

Symbol	Description	Test Conditions	Max	Unit
t_{PLH} & t_{PHL}	Propagation Delay INA to OAn, INB to OBn	CL = 15pF	1.7	ns
t_{PZH} or t_{PZL}	Output Enable Time	CL = 15pF	2.5	ns
t_{PHZ} or t_{PLZ}	Output Disable Time	CL = 15pF	2.5	ns
tr/tf	Rise/Fall Time	0.8V – 2.0V	0.8	ns
tsk(p)	Pulse Skew (Same Package)	CL = 15pF, 125MHz	0.1	ns
tsk(o)	Output Pin to Pin Skew (Same Package)	CL = 15pF, 125MHz	0.25	ns
tsk(pp)	Output Skew (Different Package)	CL = 15pF, 125MHz	0.4	ns
fmax	Input Frequency	CL = 50pF	150	MHz
fmax	Input Frequency	CL =15pF	300	MHz
fmax	Input Frequency	CL = 5pF	600	MHz
fmax	Input Frequency	CL = 2pF	800	MHz

Notes:
1. See test circuits and waveforms.
2. tpLH, tpHL, tsk(p), and tsk(o) are production tested. All other parameters guaranteed but not production tested.
3. Airflow of 1m/s is recommended for frequencies above 133MHz

Copyright © 2005, Potato Semiconductor Corporation

Test Waveforms

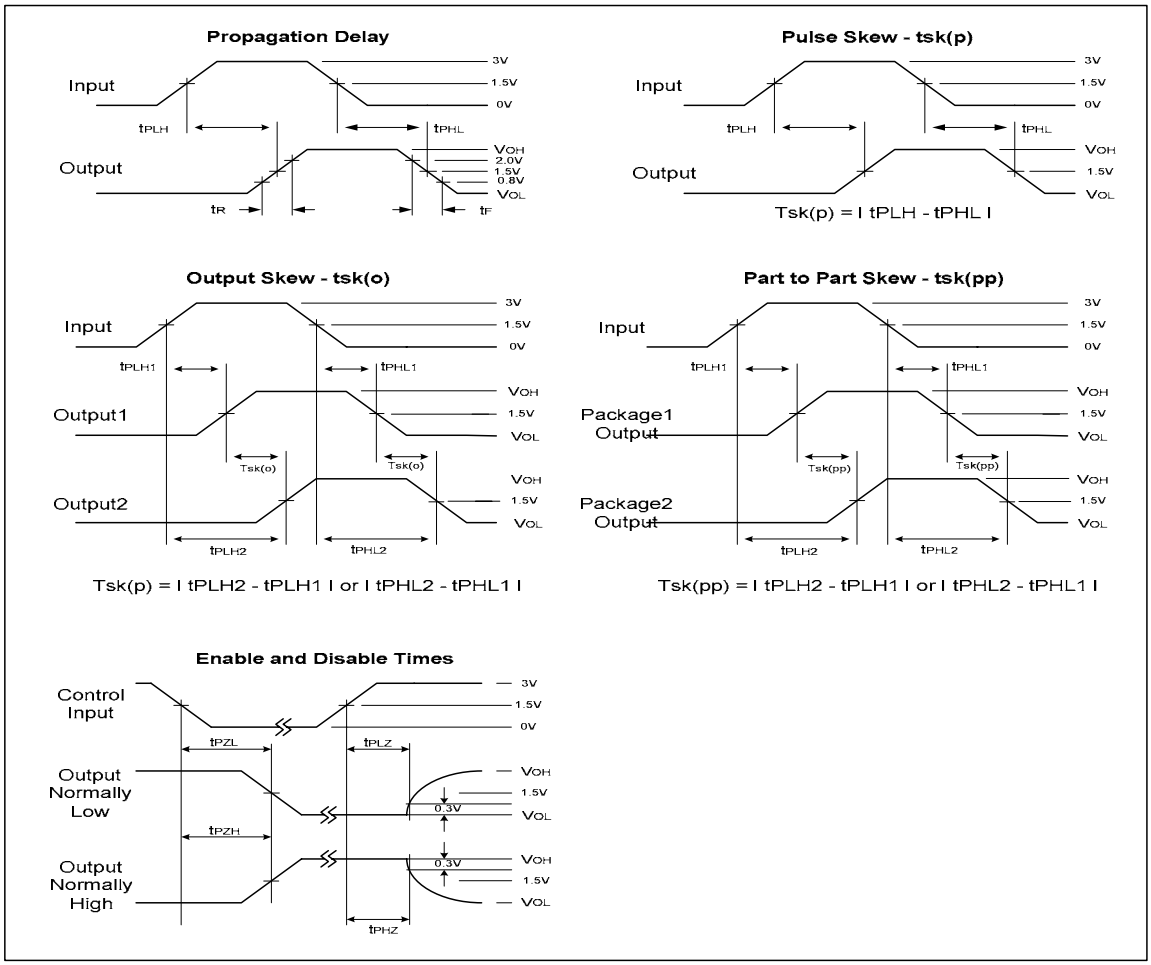

Test Circuit

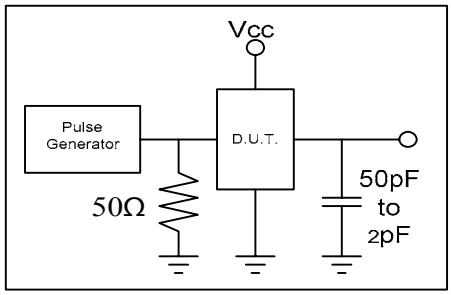

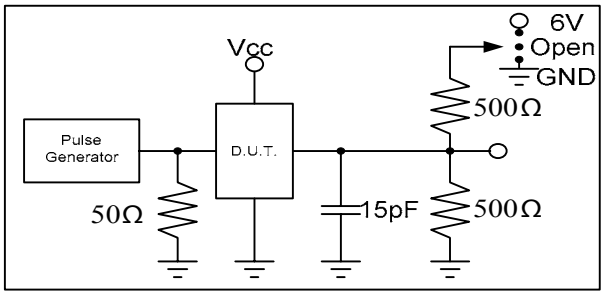

Copyright © 2005, Potato Semiconductor Corporation

Packaging Mechanical Drawing: 16 pin SOIC

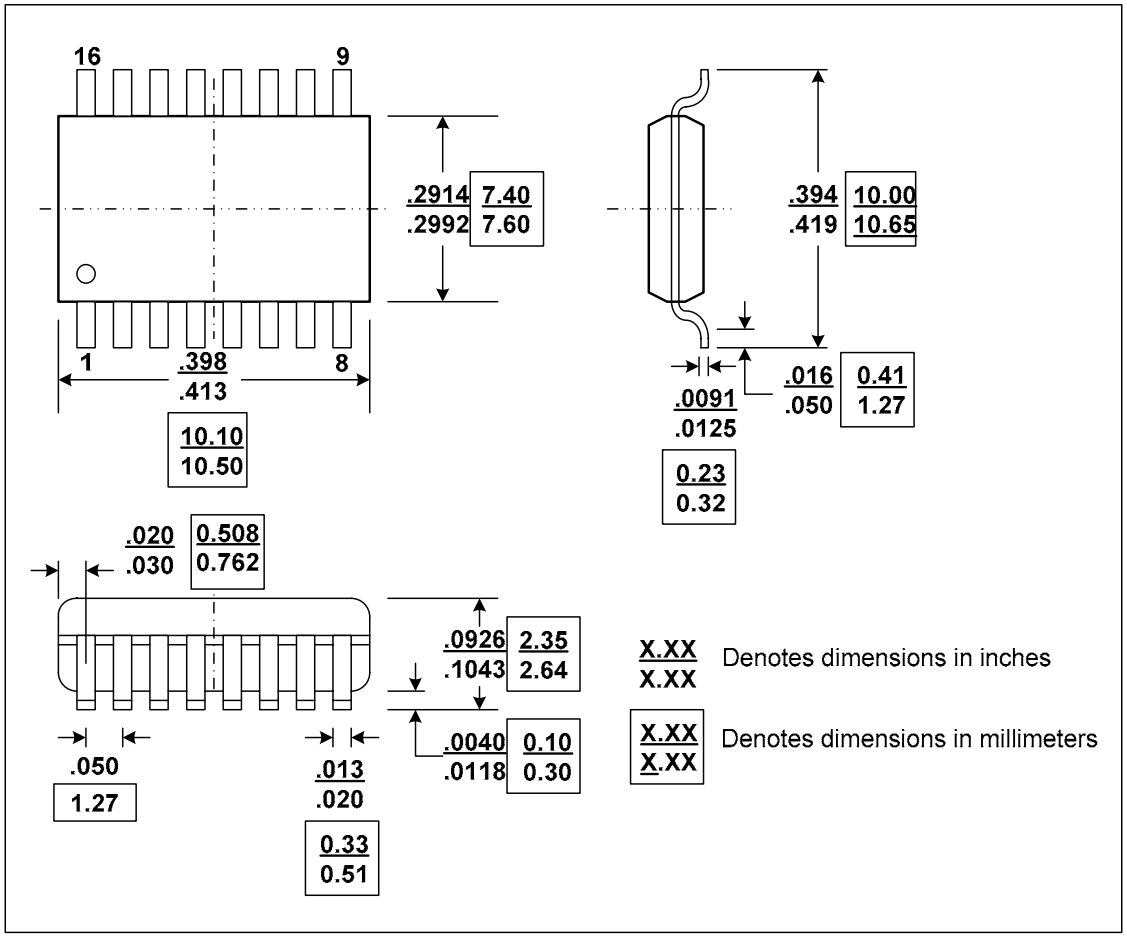

Copyright © 2005, Potato Semiconductor Corporation

Ordering Information

Ordering Code	Package Code	Package Description
PO49FCT3804S	S	Pb-free & Green, 16-pin SOIC

Copyright © 2005, Potato Semiconductor Corporation