Application Note for PO74HSTL85331A

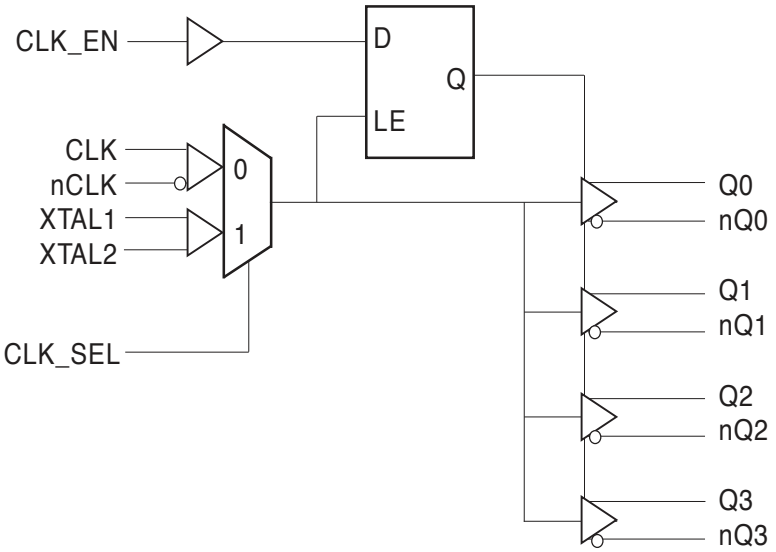

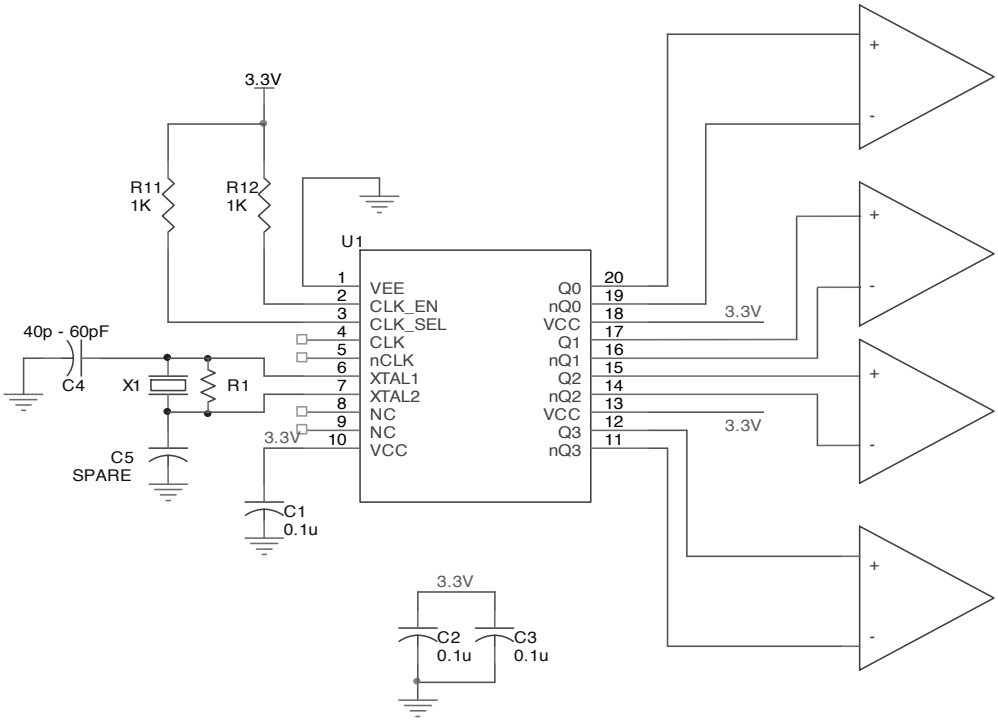

Copyright © Potato Semiconductor Corporation